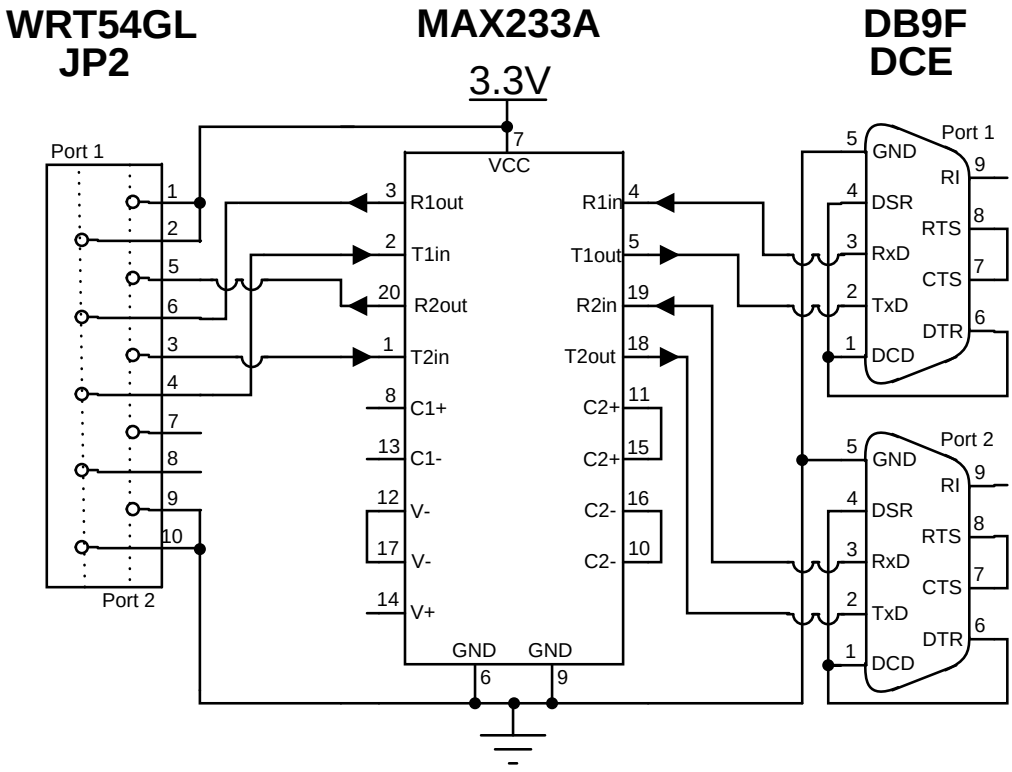
WRT54GL
JP2
MAX233A
DB9F
DCE
3.3V
Port 1
Port 2
VCC
R1out
T1in
R2out
T2in
C1+
C1-
V-
V-
V+
R1in
T1out
R2in
T2out
C2+
C2+
C2-
C2-
GND
GND
GND
DSR
RxD
TxD
DCD
RI
RTS
CTS
DTR